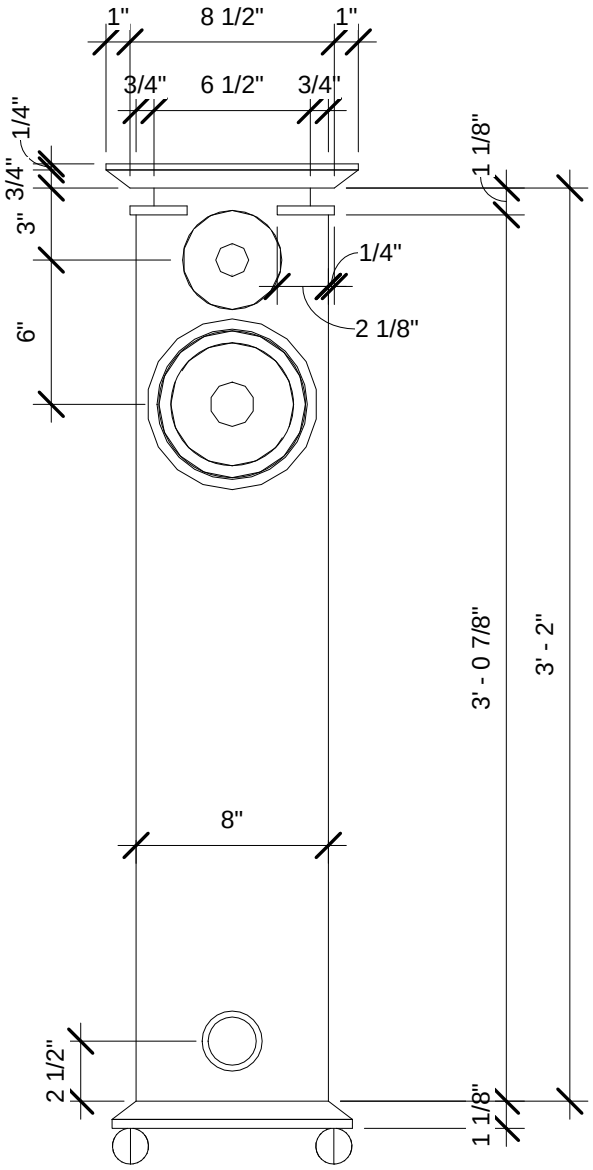

1 Front View
1 1/2" = 1'-0"

Core 2 Way Dayton RS180-8 and Dayton RS28F

A101

Speaker Concept and Design by: Paul Carmody sites.google.com/site/undefinition

Cabinet Design and Construction by: Mark Crowley www.cwm-inc.com

Scale 1 1/2" = 1'-0"

12/16/2010 10:20:06 AM